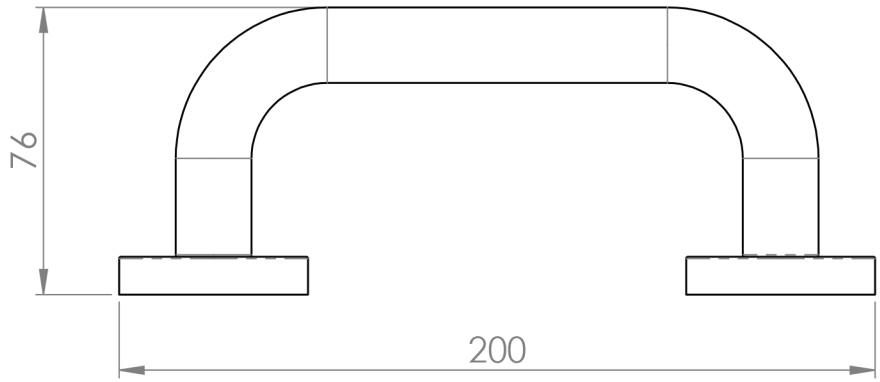
76
200

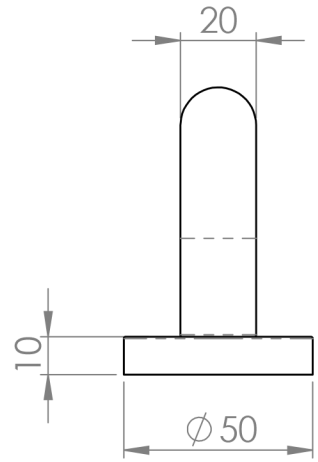
20
10
∅ 50

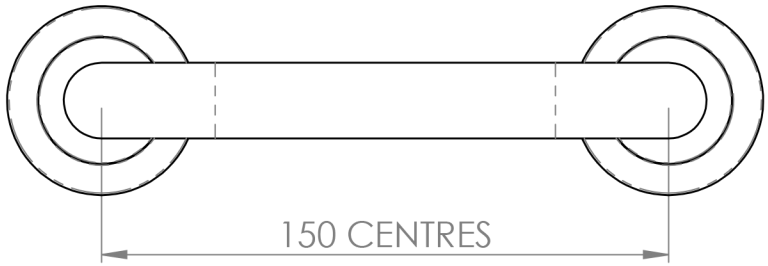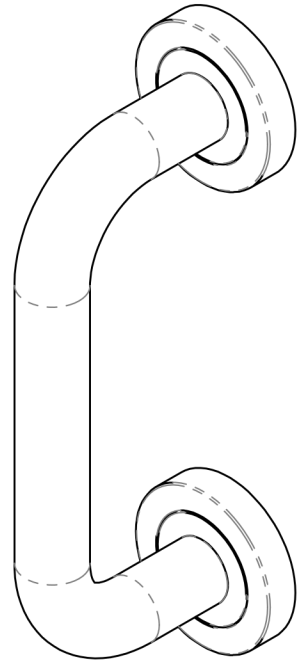
150 CENTRES