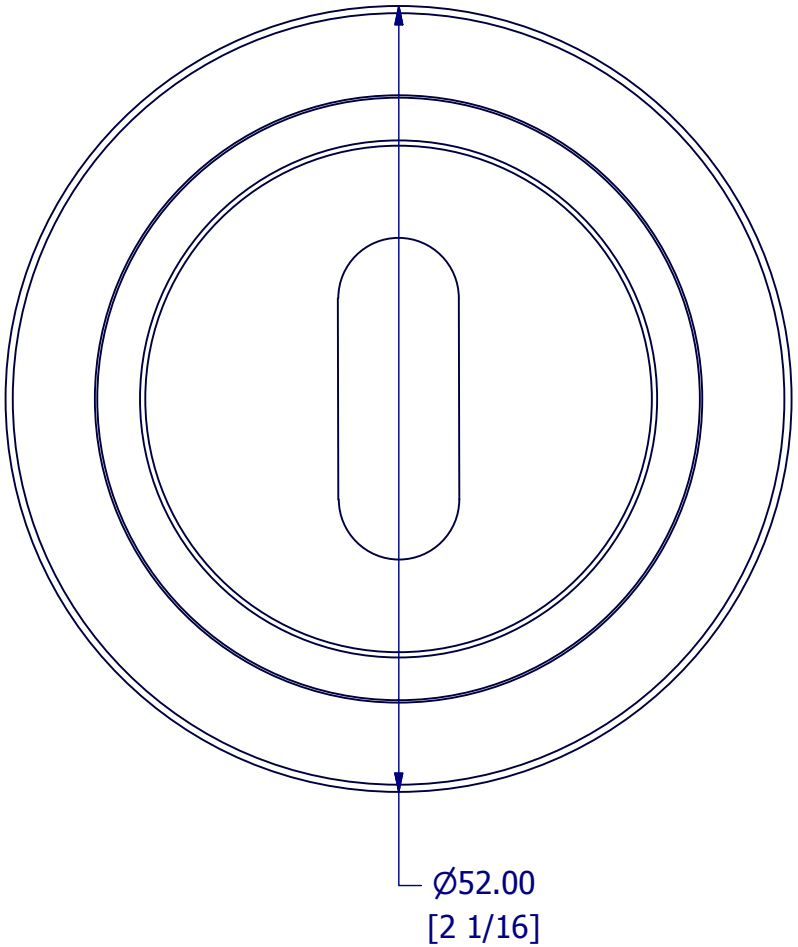

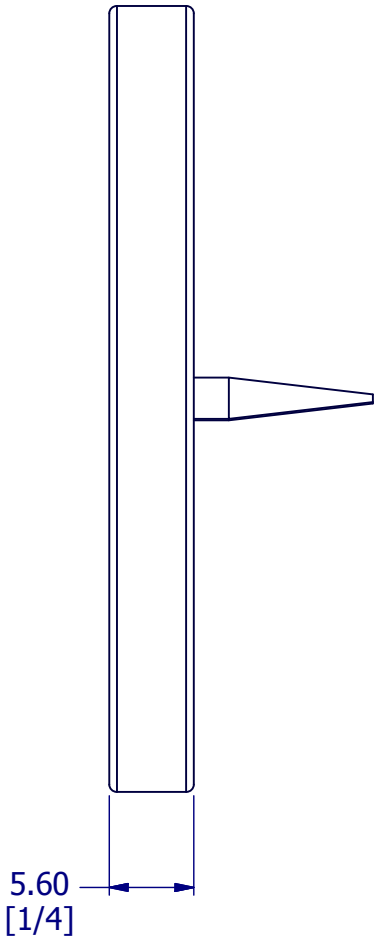

PROPERT OF SAMUEL HEATH ©			DESIGNER		ALI SHAMI	
A4	DRG No	P8183	ISSUE NO.	A	ISSUE DATE	28/11/13