Product Code: 13632

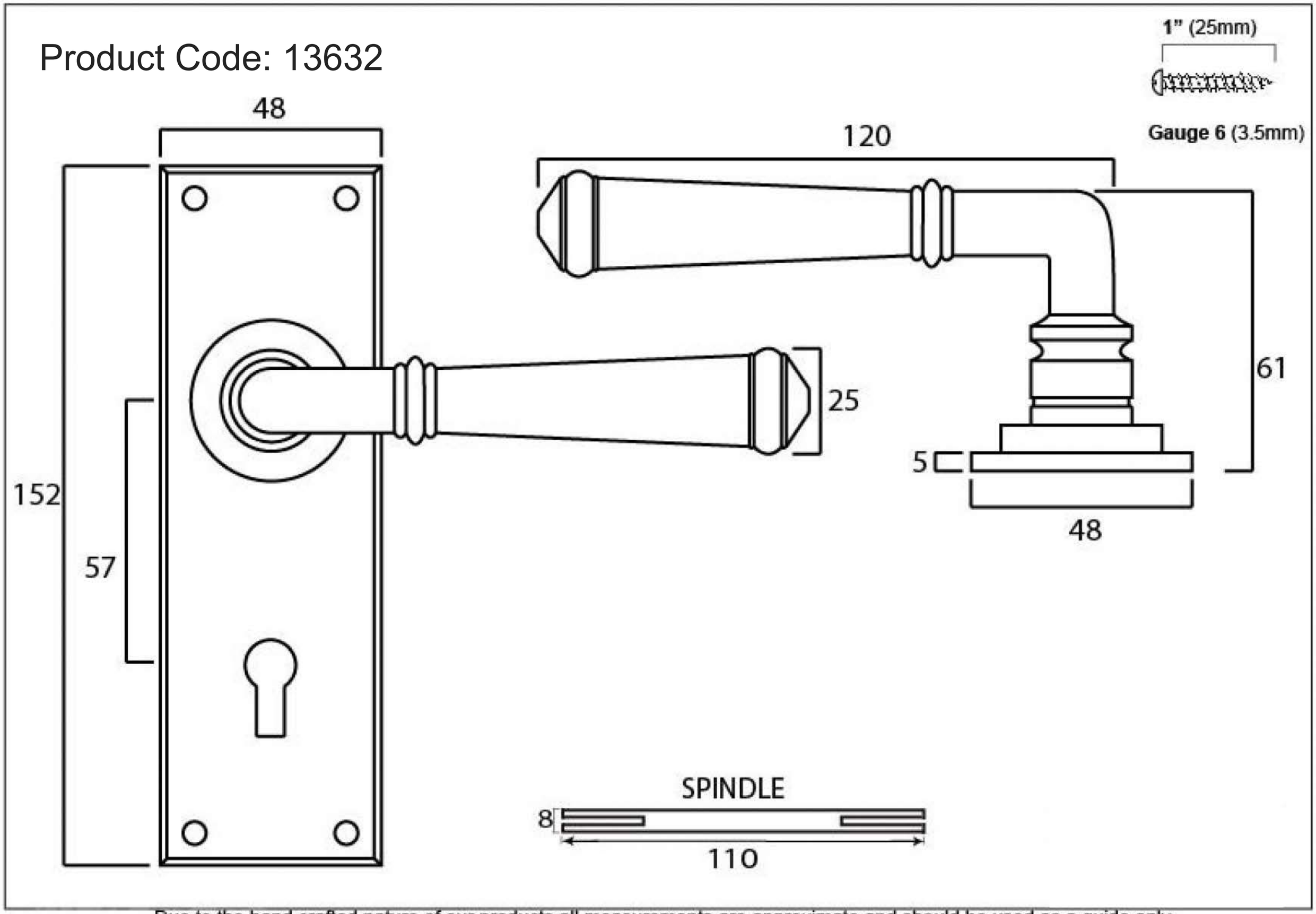

Due to the hand crafted nature of our products all measurements are approximate and should be used as a guide only