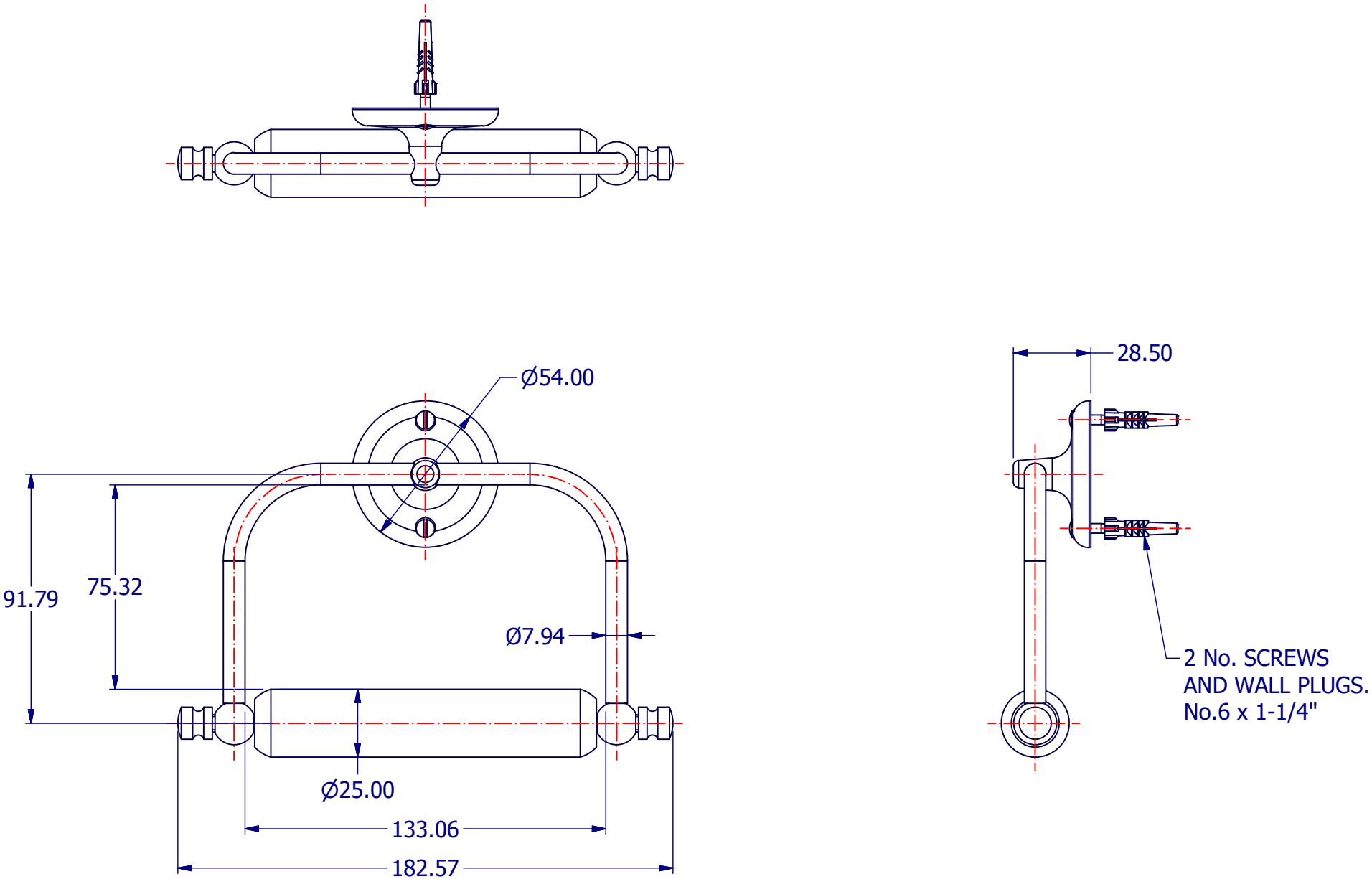

A4	DRG No	N20	ISSUE NO.	A	ISSUE DATE	25/09/12