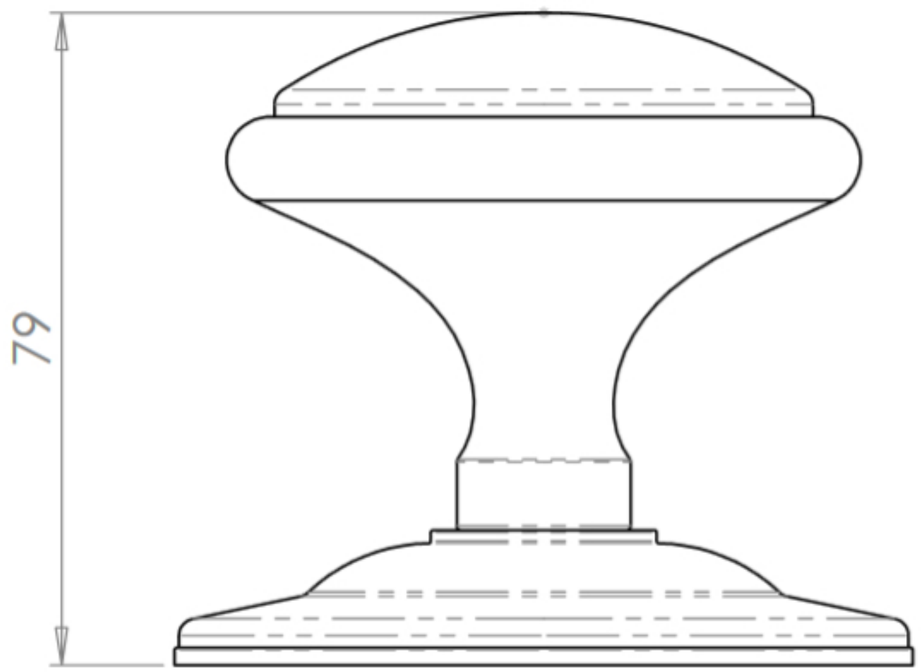
79

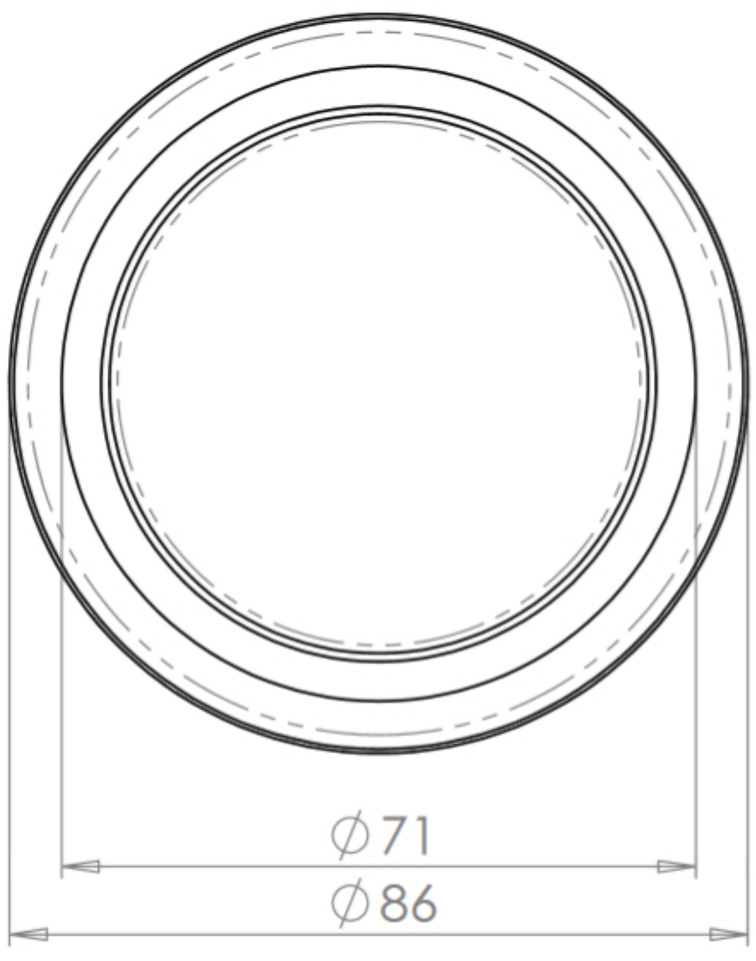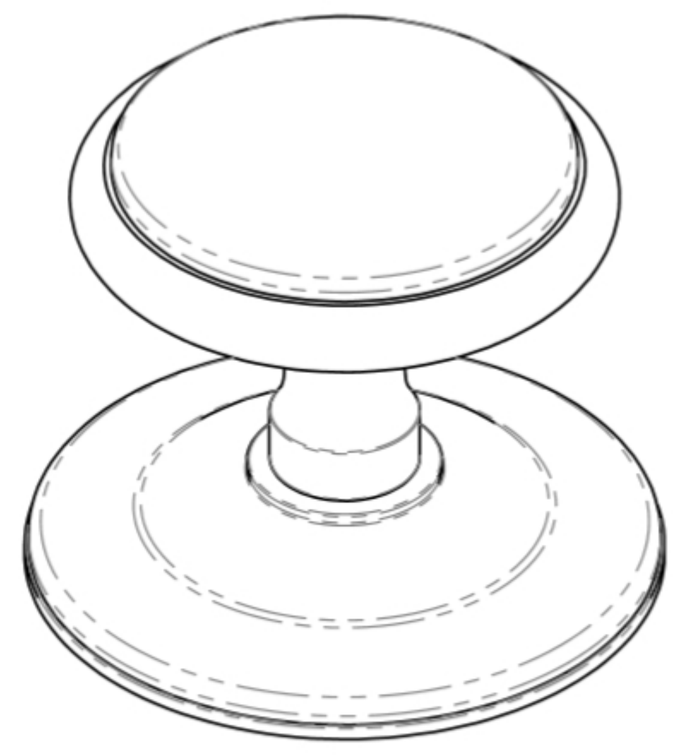
∅71
∅86